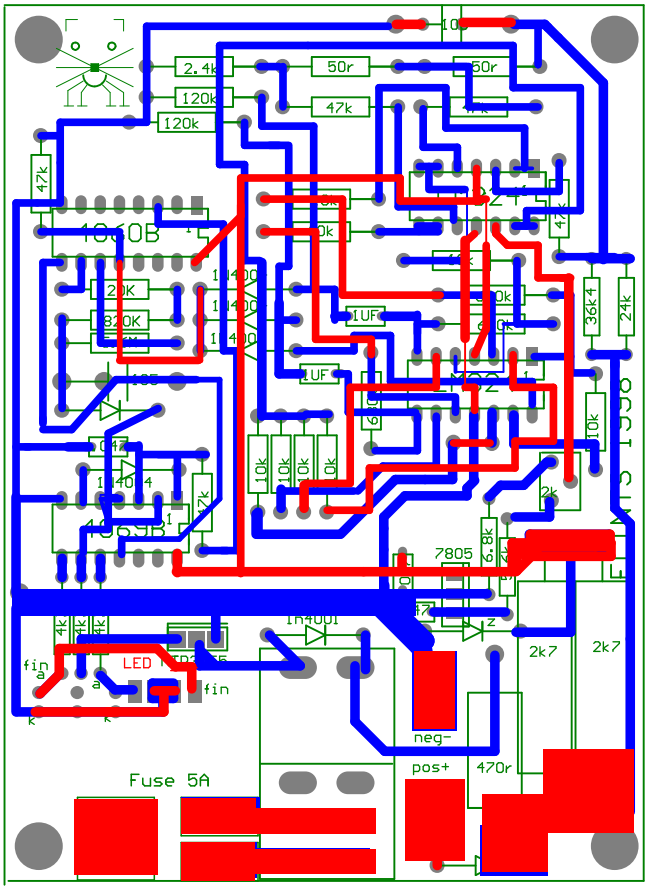
2.4k
120k
120k
50r
47k
50r
47k
47k
4010B
20K
820K
1N4001
1UF
1UF
10k
10k
10k
10k
36k4
24k
10k
2k
4013B
7805
6.8k
1N4001
2k7
2k7
LED
fin
fin
neg-
pos+
470r
Fuse 5A