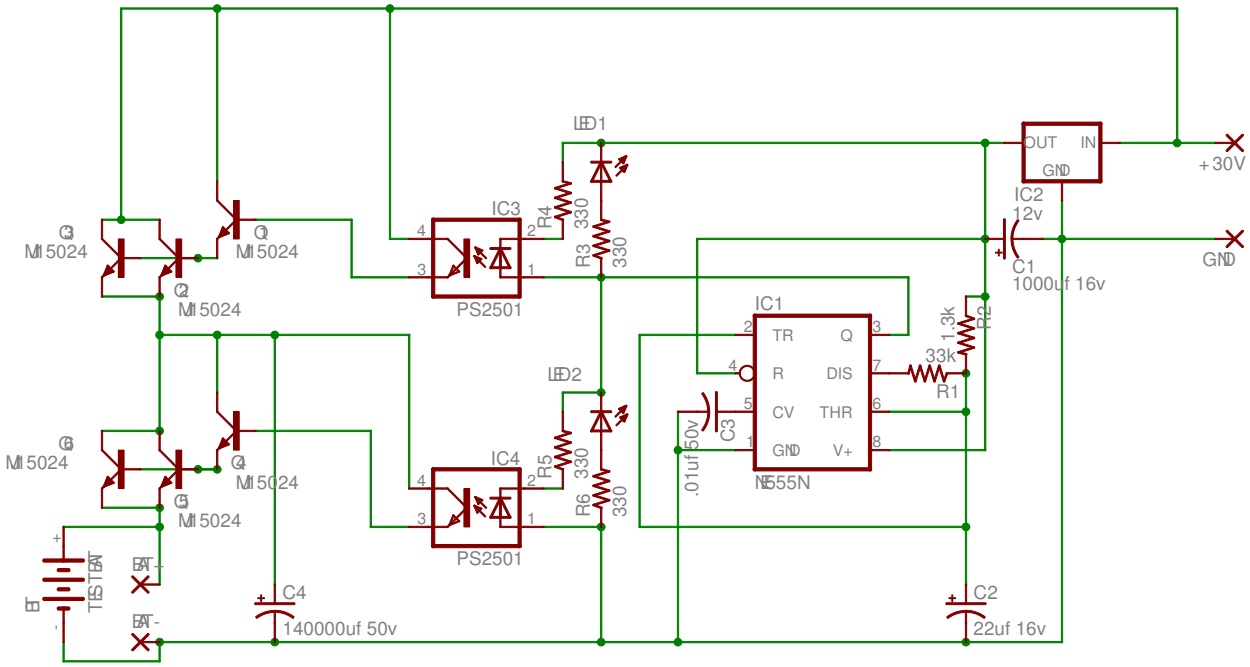
LED1
IC3
R4
330
R3
330
PS2501
IC2
12v
OUT
IN
GND
+30V
GND
C1
1000uf 16v
IC1
TR
Q
R
DIS
CV
THR
GND
V+
NE555N
33k
R1
1.3k
R2
C3
.01uf 50v
LED2
IC4
R5
330
R6
330
PS2501
Q3
MJ5024
Q1
MJ5024
Q2
MJ5024
Q6
MJ5024
Q4
MJ5024
Q5
MJ5024
BT
TEST BAT
BAT+
BAT-
C4
140000uf 50v
C2
22uf 16v