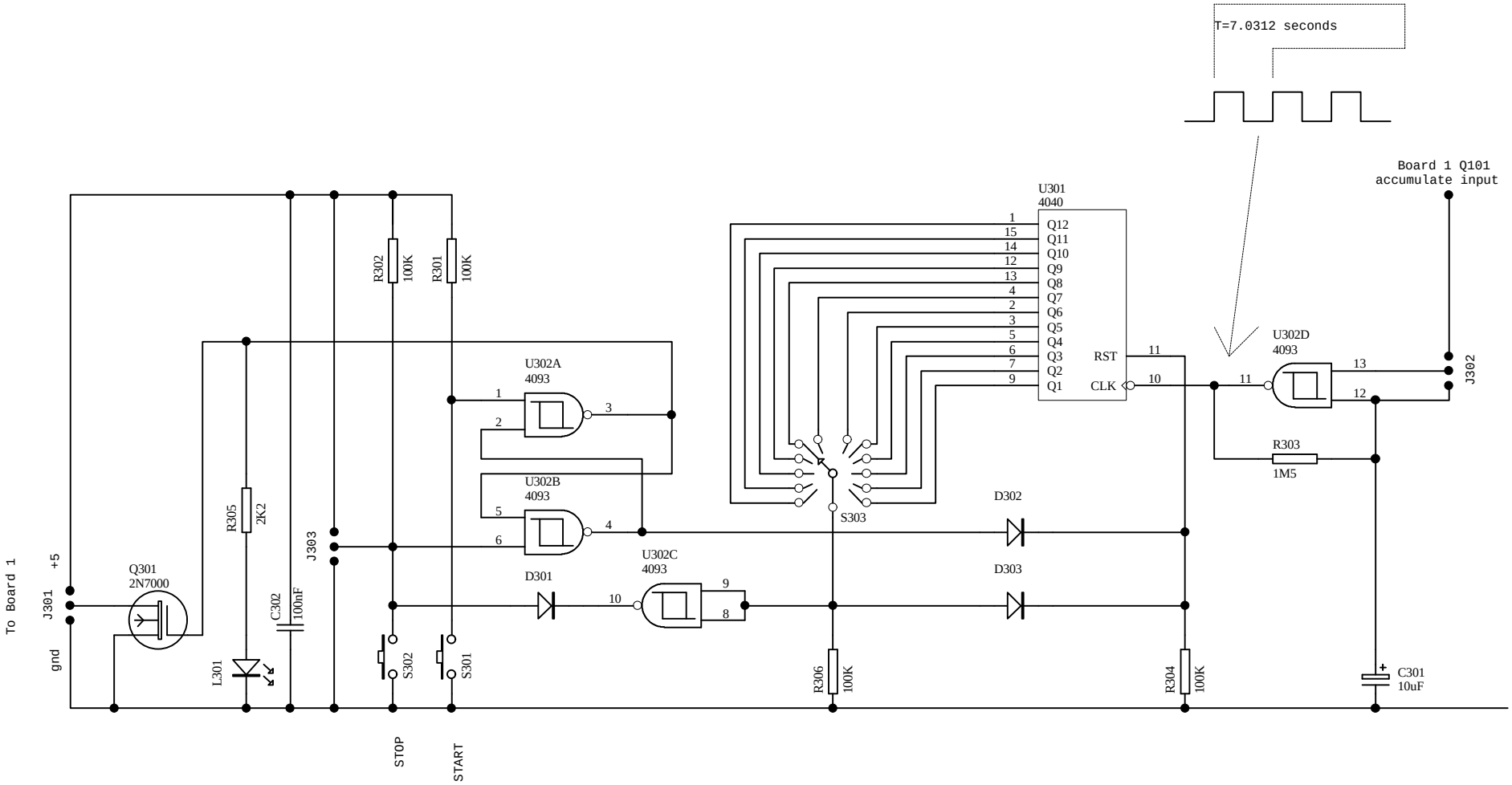

J301 connection to Board 1
J302 up for accumulating timer
down for straight timer
J303 connection to Battery Temperature Sense Board

Copyright 2006
Amanda Wynne
Commercial Rights
Reserved

Title	Dump Load Controller	
Size: A4	Number: Timer	Revision: 1.1
Date: 29-Jun-2006	Sheet 3 of 5	
File: C:\CDR-DE~1\PROTEL\SCH\09590200.SCH	Drawn By: AW	